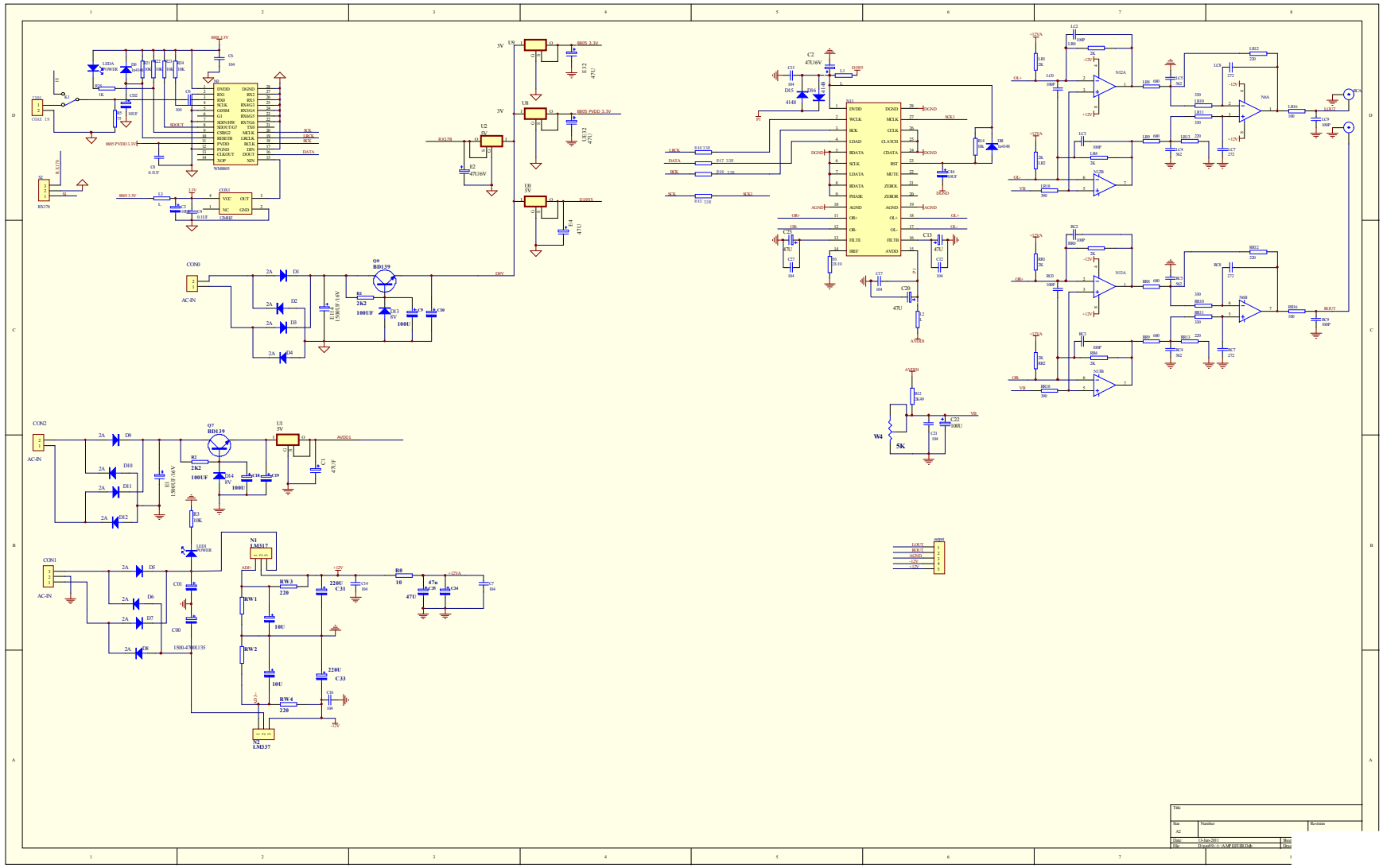
CON0
AC-IN
CON1
AC-IN
CON2
AC-IN
Q0
BD139
Q7
BD139
N1
LM317
N2
LM337
W4
5K
Title:
Size:
A2
Number
Revision
Date:
3-Jan-2011
Sheet
File:
Drawn: